MNH 520 701

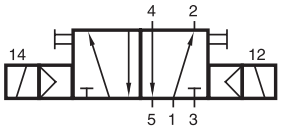

MNH 520 701

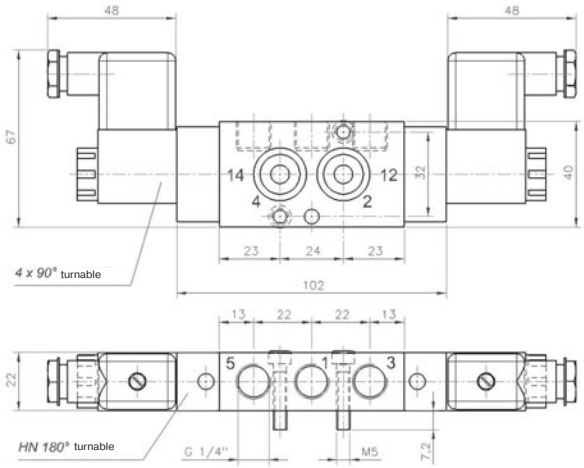

5/2-way solenoid valve actuated by impulse. Position is kept until next electrical sign even when not attached to electrical source. Interface according to Namur standard.

Available with actuators:
230V/50Hz, 110V/50Hz, 24V/50Hz, 24V=.

The valves are generally equipped with manual override to turn (standard). If requested without manual override, please order MN 520 701.

Also available with manual override to push, then please order MND 520 701.

Obtainable as well with external pilot feed; then please order MENH 520 701.

Delivery includes: 1 pin, 2 screws, 2 O-rings and connector as shown on the photo.

Type	Port size	Air flow	Operating press.	Power consumption	Weight
MNH 520 701	G 1/4"	1250 l/min	1,5 - 10 bar	3 W = /5 VA ~	0,43 kg