BV/BR/BL 311 201

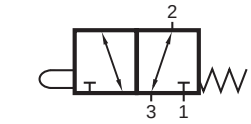

BV 311 201

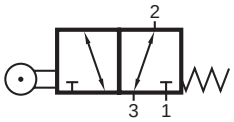

BR 311 201

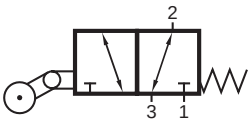

BL 311 201

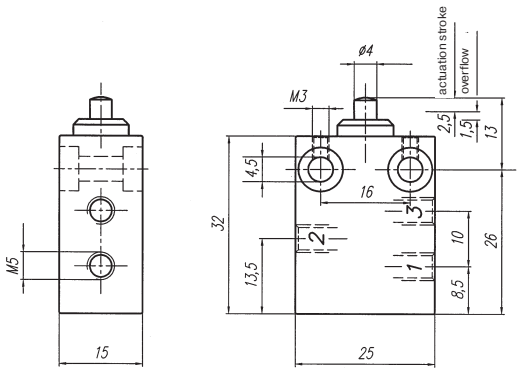

Mechanically actuated 3/2-way spool valve with mechanical spring. All ports are on the side of the valve.

Normally open from 2 to 3; 1 is closed. Operated open from 1 to 2; 3 is closed.

The use of the ports is interchangeable.

Pressure at port 1 means normally closed, pressure at port 3 means normally open.

Exhaust can be throttled.

Versions for vacuum use are available on request.

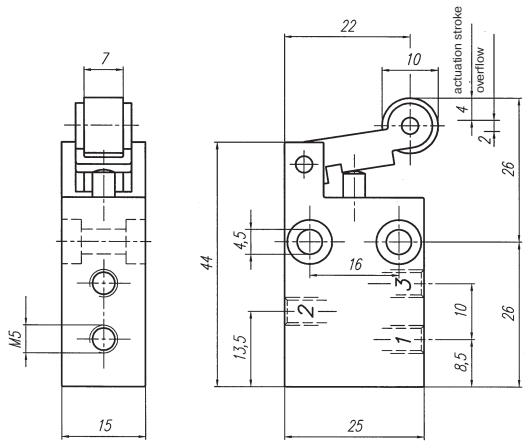

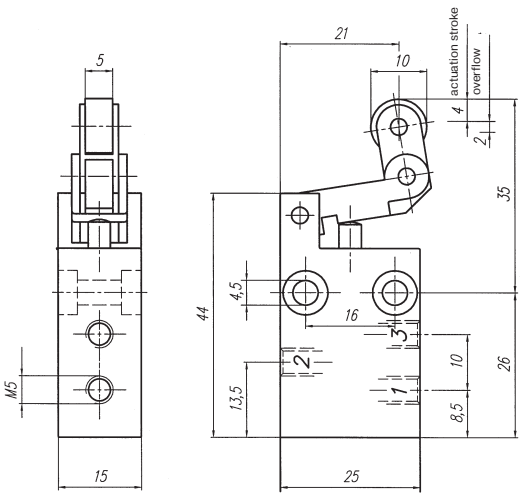

Type	Port size	Air flow	Operating press.	Actuating force	Weight
BV 311 201	M 5	125 l/min	0 - 10 bar	14 N	0,033 kg
BR 311 201	M 5	125 l/min	0 - 10 bar	9 N	0,041 kg
BL 311 201	M 5	125 l/min	0 - 10 bar	9 N	0,044 kg